文件資料管制 文件資料管制 文件資料管制 All rights reserved

②圖面修正

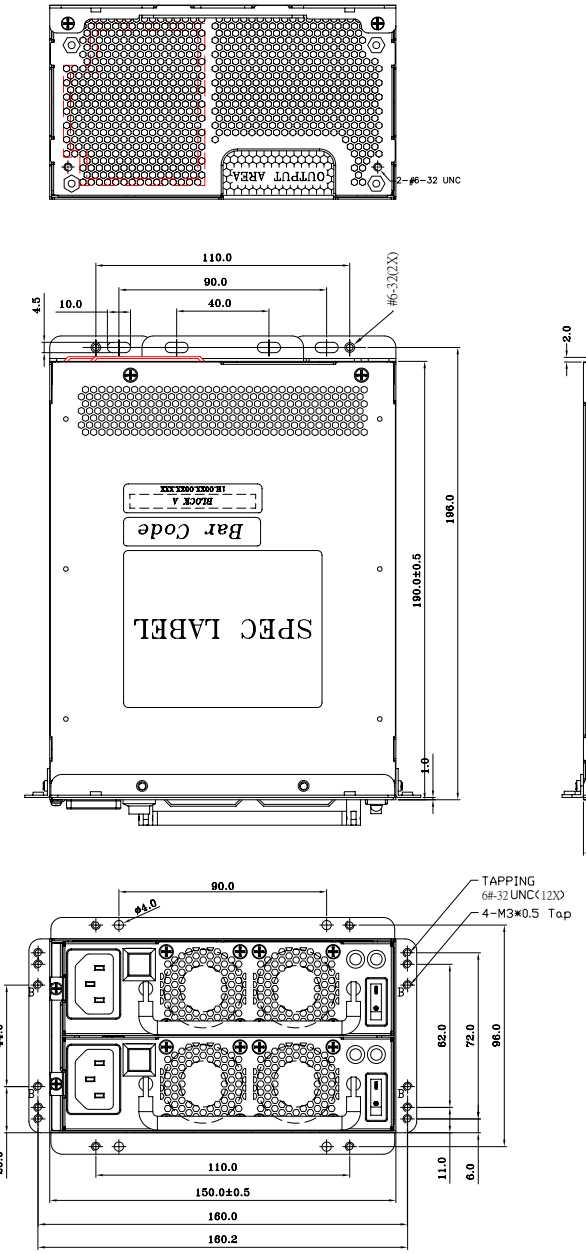

UNIT:mm

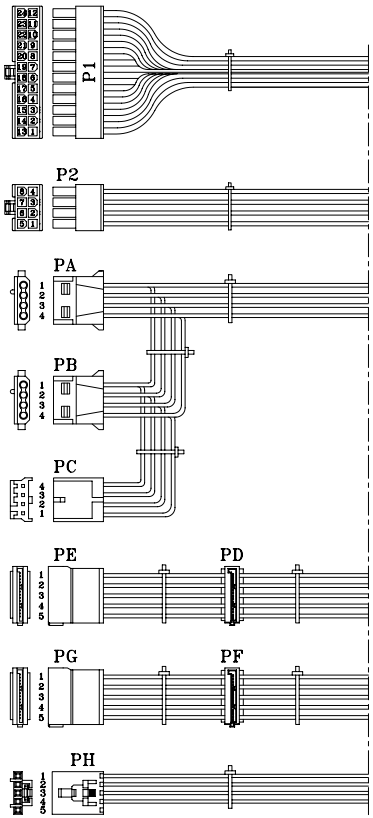

REF. ID.	PIN NO.	SIGNAL	WIRE COLOR	GAUGE	CONNECTOR TYPE	CABLE LENGTH
P1	1	+3.3V	ORANGE	18	MOLEX 39-01-2240 or EQUIV.	350±15mm
	2	+3.3V	ORANGE	18		
	3	COM	BLACK	18		
	4	+5V	RED	18		
	5	COM	BALCK	18		
	6	+5V	RED	18		
	7	COM	BALCK	18		
	8	PW-OK	GRAY	22		
	9	+5Vsb	PURPLE	18		
	10	+12V	YELLOW	18		
	11	+12V	YELLOW	18		
	12	+3.3V	ORANGE	18		
	13	+3.3V	ORANGE	18		
		+3.3Vsense	BROWN	22		
	14	-12V	BLUE	22		
	15	COM	BALCK	18		
	16	PS-ON	GREEN	22		
	17	COM	BALCK	18		
	18	COM	BALCK	18		
	19	COM	BALCK	18		
②	20					
	21	+5V	RED	18		
	22	+5V	RED	18		
	23	+5V	RED	18		
	24	COM	BALCK	18		
P2	1	COM	BALCK	18	MOLEX 39-01-2080 or EQUIV.	350±15mm
	2	COM	BALCK	18		
	3	COM	BALCK	18		
	4	COM	BALCK	18		
	5	+12V	YELLOW	18		
	6	+12V	YELLOW	18		
	7	+12V	YELLOW	18		
	8	+12V	YELLOW	18		
PA	1	+12V	YELLOW	18	AMP 1-480424-0 or EQUIV.	350±15mm
	2	COM	BALCK	18		
	3	COM	BALCK	18		
	4	+5V	RED	18		
PB	1	+12V	YELLOW	18	AMP 1-480424-0 or EQUIV.	155±10mm
	2	COM	BALCK	18		
	3	COM	BALCK	18		
	4	+5V	RED	18		
PC	1	+5V	RED	22	AMP 171822-4 or EQUIV.	155±10mm
	2	COM	BALCK	22		
	3	COM	BALCK	22		
	4	+12V	YELLOW	22		
PD PF	1	+3.3V	ORANGE	18	MOLEX SD-67926-0011 or EQUIV.	350±15mm
	2	COM	BALCK	18		
	3	+5V	RED	18		
	4	COM	BALCK	18		
	5	+12V	YELLOW	18		
PE PG	1	+3.3V	ORANGE	18	MOLEX SD-67582-001 or EQUIV.	155±10mm
	2	COM	BALCK	18		
	3	+5V	RED	18		
	4	COM	BALCK	18		
	5	+12V	YELLOW	18		
PH	1	SCL	BLUE	22	WST P5-125402 or EQUIV.	350±10mm
	2	SDA	PRUPLE	22		
	3	PSALERT	GREEN	22		
	4	GND	BALCK	22		
	5					

P/N.:9PR3501500

NOTE:

1. ALL THE LENGTH OF OUTPUT WIRES EXCLUDE HOUSING.

+12V1孔	P2(PIN5,6,7,8)
+12V3孔	P1,PA,PD,PF

MODEL NO. : FSP350-60MRB(S)	TITLE: ASSY		SHEET: 1 OF 1 REV:02
R&D(2)	PE	DRAWN	DATE
		周書宇	AUG.23.2018
INTERIOR COUNTERSIGN:			

建立時間:2019-08-23 17:05:35
OAD-00002322-R02.pdf
1/1禁止翻印外洩 All rights reserved