全漢企業股份有限公司
FSP TECHNOLOGY INC.

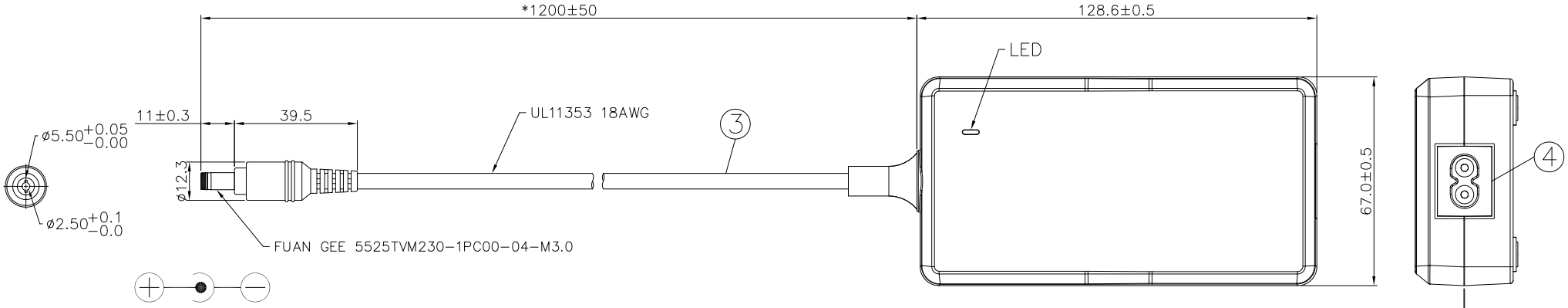

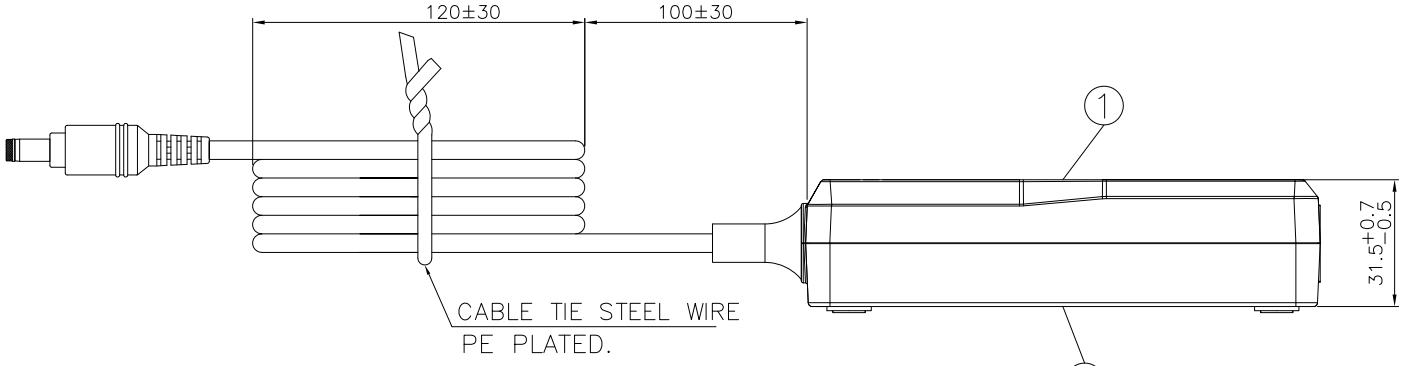

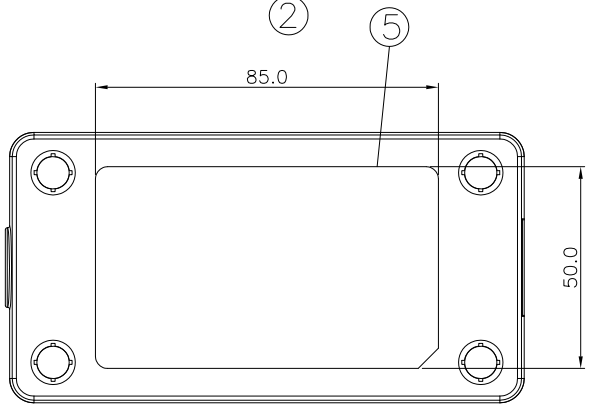

ITEM	PART NAME	COLOR
1	COVER	BLACK
2	CHASSIS	BLACK
3	POWER CORD	BLACK
4	SOCKET	BLACK
5	LABEL	BLACK

P/N.:9NA0630200

THIRD ANGLE PROJECTION

SCALE:
UNIT:mm

DIMENSIONAL TOLERANCES			HOLES : ±0.05 ANGLES : ±0.5°
( ) <30 :±0.2 >30~100 :±0.3 >100~200 :±0.4 >200~300 :±0.5 ABOVE 300:±0.8	( ) DECIMALS X :±0.8 X.X :±0.5 X.XX:±0.3	(√) UP~100 :±0.2 100~150 :±0.25 150~200:±0.3 200~250:±0.35 250~300:±0.4 300~350:±0.45 350~400:±0.5	( ) UP~600 :±1.5 600~900 :±2.4 900~OVER:±3.1

MODEL NO. : FSP063-10S1A5C8	TITLE: Physical Dimension		SHEET: 1 OF 1	REV:01
R&D3 Division	P E	ME	DATE	
L.J	Angela	Angela	2021/06/07	
INTERIOR COUNTERSIGN:				

Mechanical Drawing (外觀/機構圖)